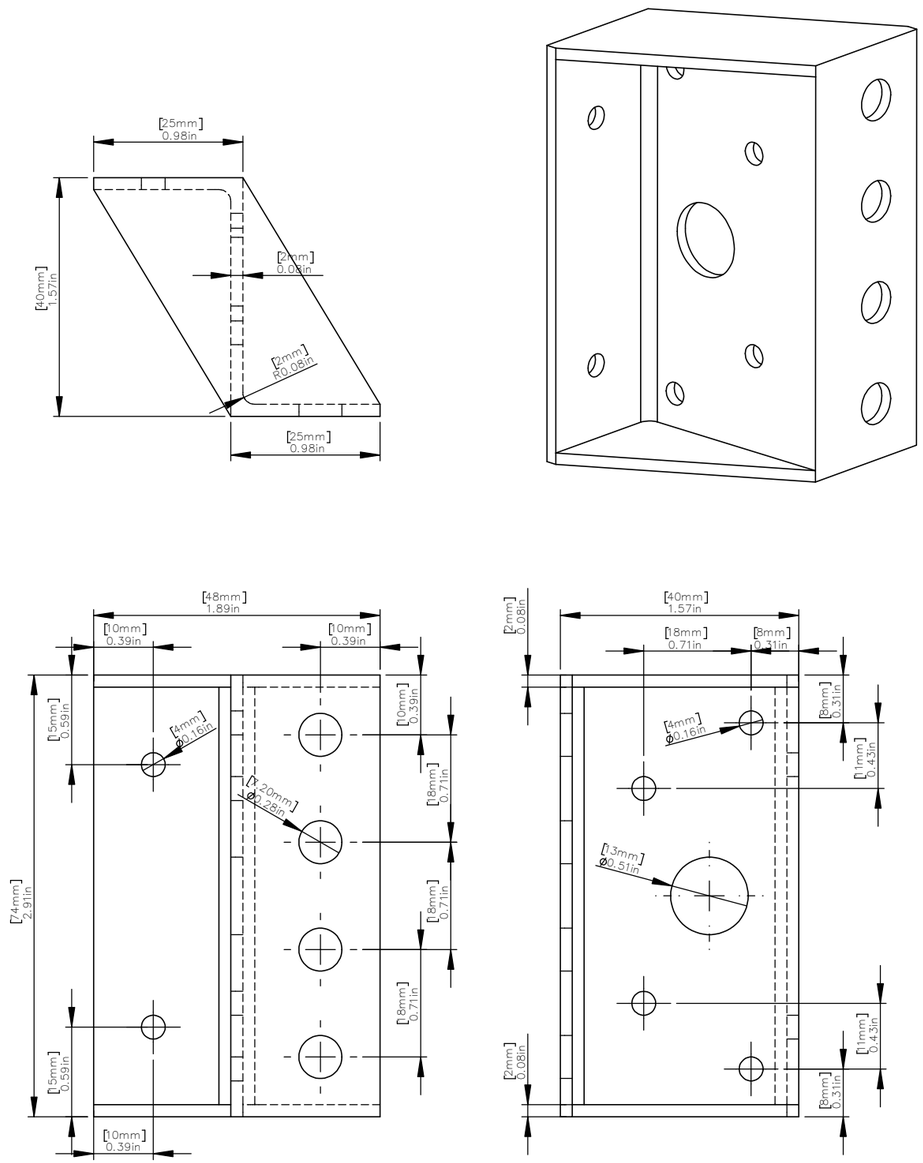

Pushbutton Mounting Bracket
Z–Configuration

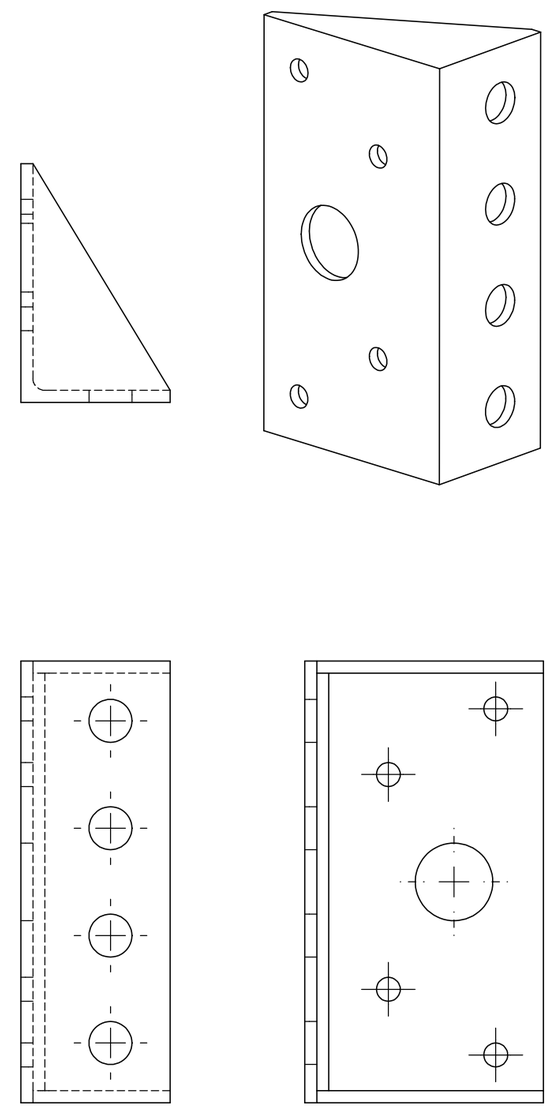

Pushbutton Mounting Bracket
L–Configuration
(Hole sizes and dimensions
identical to Z–configuration)

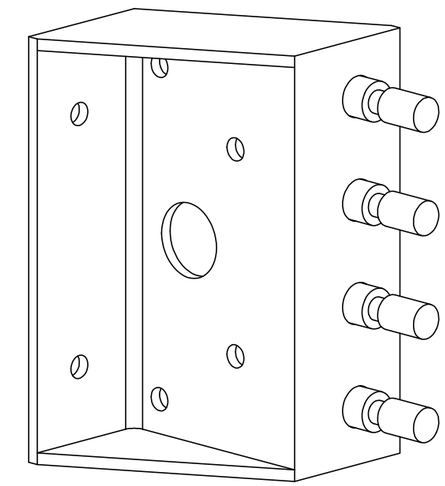

REV	DATE	BY	DESCRIPTION
A	04/17/19	AOB	Added Edge Stiffeners

Integrated Treatment Systems, LLC
P.O. Box 80 Santa Claus, IN 47579
812.480.1371

Copyright (c) 2017 Integrated Treatment Systems, LLC d/b/a ITS. This drawing is the property of ITS. All layouts and designs are created for use on this specific project. No part of this design or drawing shall be reproduced, distributed, disclosed, or used by any person or organization, in whole or in part, without the express written permission of ITS. Contractor shall verify and be responsible for all dimensions and conditions on site. Contractor shall notify ITS of any variations from the design shown herein.

WATERFEATURE8

PUSHBUTTON MOUNTING BRACKET

HORIZ. SCALE	PROJECT NO.
N/A	1800##
VERT. SCALE	DATE
N/A	12/04/2018
DRAWN BY	DESIGNED BY
AOB	AOB
DRAWING NO.	SHEET NO.
C0.0	01 OF 01